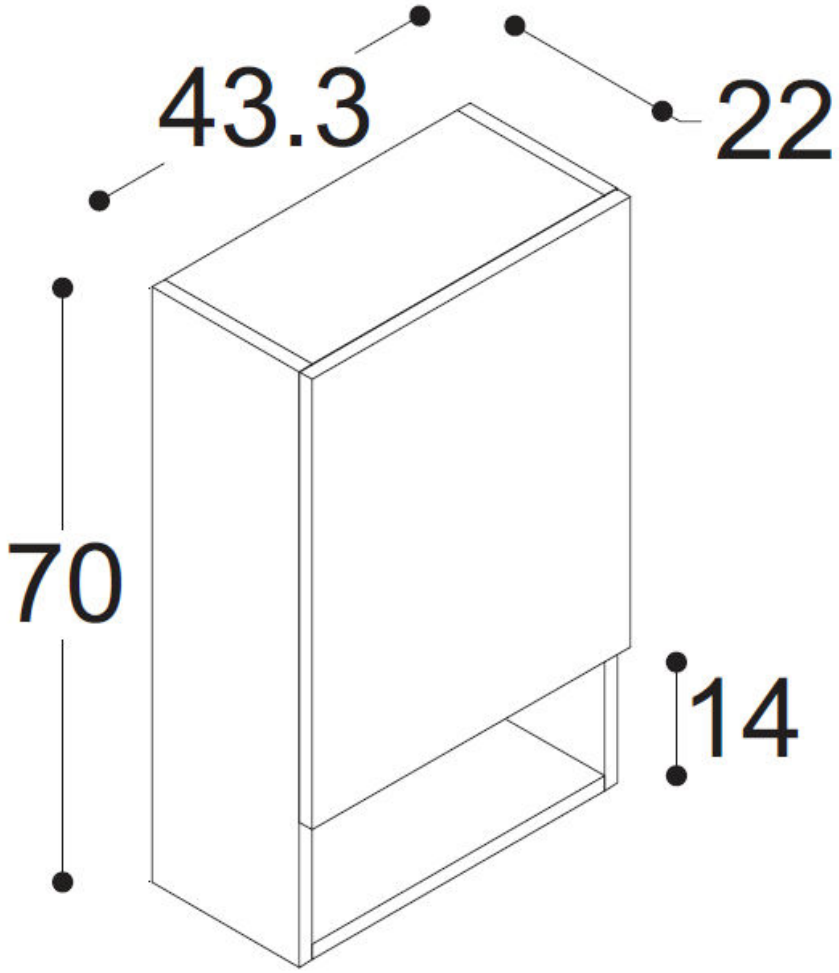
43.3
22
70
14